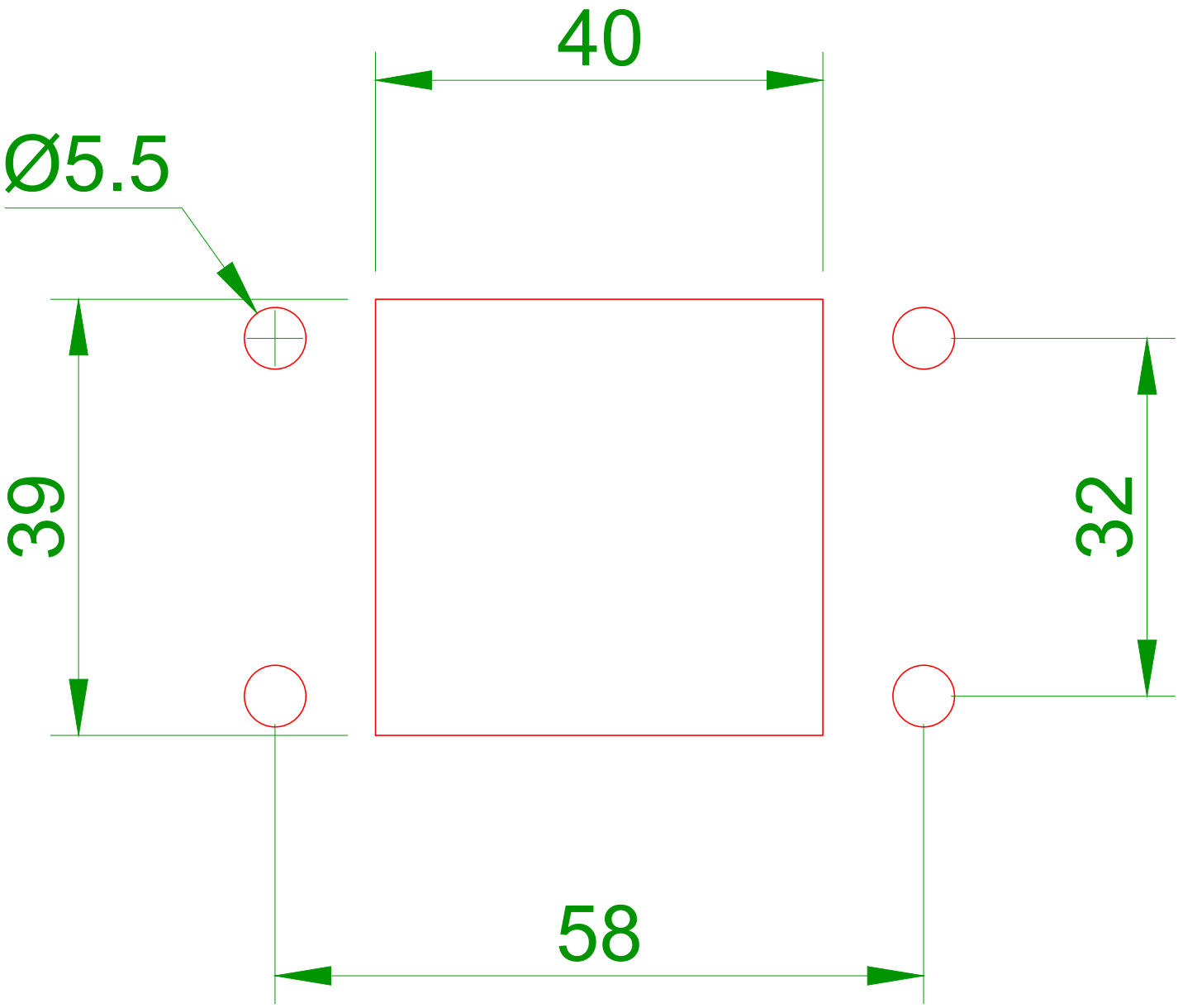
40
Ø5.5
39
32
58