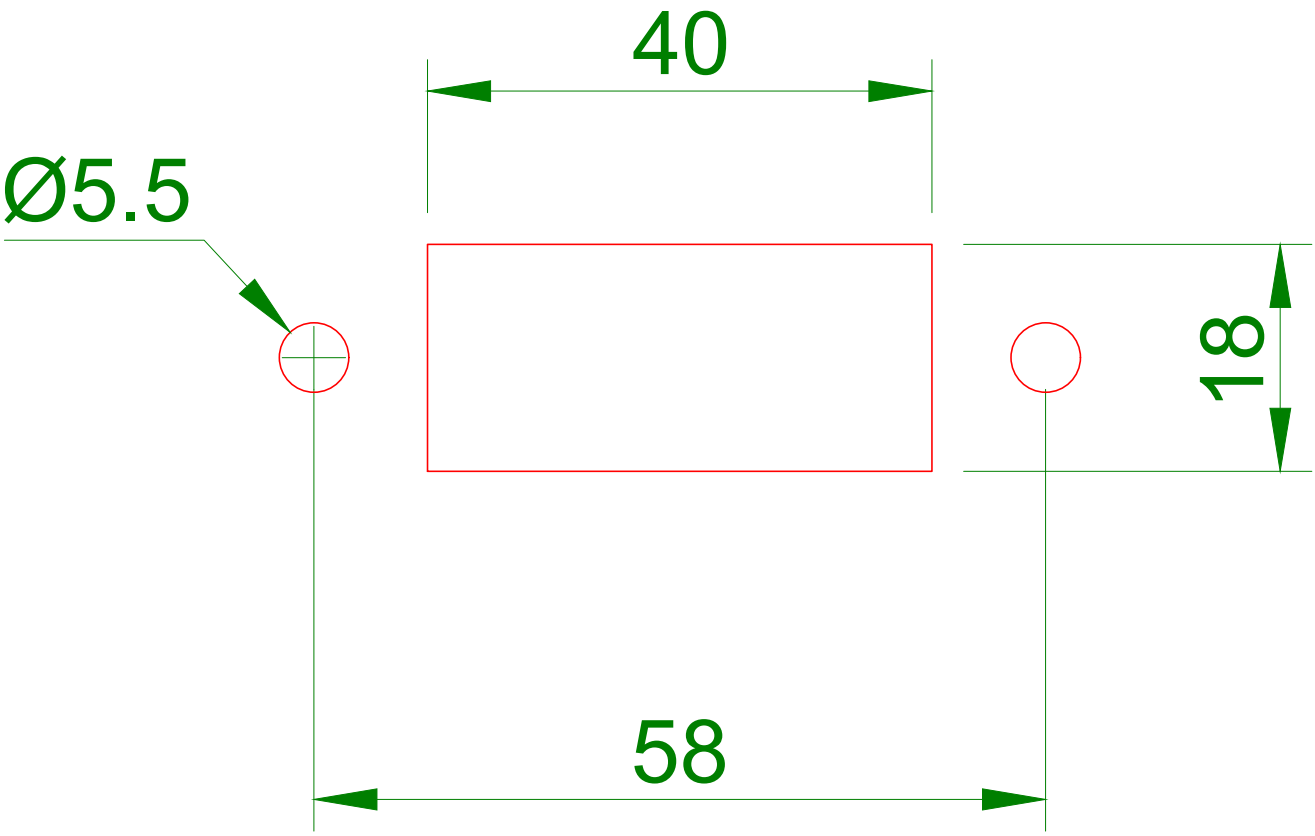
40
Ø5.5
18
58